Transpalock 900

The Transpalock 900 glass turnstile, belongs to the Boon Edam's top range of Security Barriers. This product offers a simple yet effective method of controlling an internal passage without creating an obtrusive barrier. Constructed mainly from tempered glass and stainless steel the product can match many surroundings.

The Transpalock 900 is a three-wing turnstile, combined with either a tubular stainless steel frame, or a curved toughened glass panel and provides a secure enclosure. The frameless toughened glass door wings are mounted on a central column, which houses the drive, control and locking mechanisms.

The Transpalock 900 allows by circular movement a fully automatic bi-directional access control and accommodates traffic of one person at a time. A stainless steel tube frame prevents unauthorised persons from walking in from the other direction.

The drive and locking mechanism has been specifically developed for this product to offer an exceptionally high standard of reliability and allow a separately adjustable speed and torque.

To create an entrance for wheelchairs or persons with large goods or luggage it is advisable to combine a Boon Edam Winglock in the entrance.

Boon Edam will advise you in your choice of Transpalock 900 or of any other of our wide range of security barriers.

BOON EDAM TOMSED

Transpalock 900

Technical specifications

Capacity
15 passages per minute.
Bi-directional

Material
A Ø40 mm tube frame and the column are finished with brushed stainless steel 320S, AISI 304.
The door wings are of 8 mm tempered glass.

Weight
87 kg

Fail-Safe
Automatic unlocking of the mechanism in case of power failure or fire alarm.

Power supply
230 VAC, 50 Hz + PE

Power consumption
0.25 kW

Power failure
The door set unlocks on a power failure, creating free passage in either direction.

Operation
Operated by an external control panel or compatible with most access control systems, for example, a card reader.

Installation
As standard screw fixed to the floor surface. Other fixing options are available.

Service and maintenance
The control and drive are mounted in the centre column for easy installation and maintenance.

Optional accessories
- An external control panel, for example, at the reception desk.
- A fixing for a card reader on the tube frame.
- An external console for mounting the card reader.

Guide Rails
Boon Edam has an extended range of guide rails with (900-GL) or without (900-TR) glass panels and can advise on any custom requirement.

Certification
The Transpalock 900 complies with the machine directive (98/37/EEG), the EMC directive (89/336/EEG) and the low voltage directive (93/68/EEG).

Working principle

The Transpalock 900 is always locked in the rest position, but will begin to rotate in the desired direction when authorisation is granted via an access control system. Alternatively authorisation can be given via an external control panel, for example, at the reception desk. Once authorisation is given, the three-wing turnstile turns 120° and locks again.

The Transpalock 900 allows authorised traffic in both directions, and a number of authorisation signals is stored by the in-built control system so that the door will 'remember' to turn in the correct direction for each person.

The following working principle modes are possible in each direction:

- Access controlled electronically, with unlocking of the mechanism creating free rotation;
- Access permanently mechanically locked.

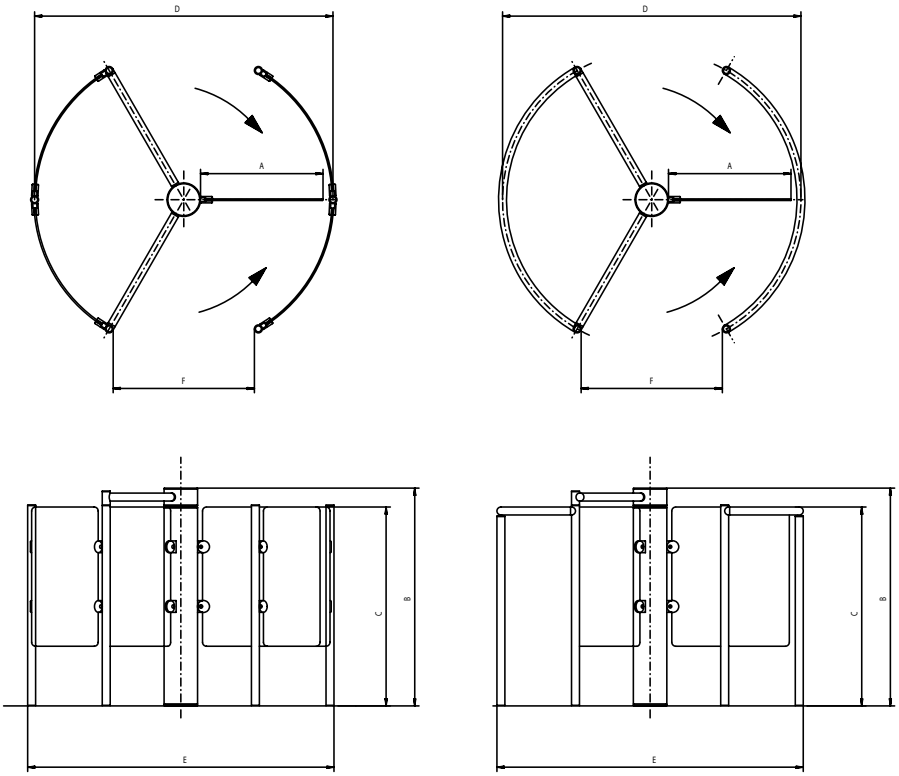

Dimensions table

		Transpalock 900
A	Door wing length	616 mm
B	Unit heigth	1095 mm
C	Door wing heigth (from floor)	1000 mm
D	Diameter	1500 mm
E	Overall width	1540 mm
F	Day opening	710 mm

Transpalock 900

Transpalock 900 features:

- User friendly, self explanatory
- High operational safety
- Stylish transparent sophisticated design
- Transparent appearance
- Slender stainless steel tube frame
- Bi-directional access control

Distributor

BOON EDAM TOMSED

Boon Edam Tomsed Inc.
402 McKinney Parkway
Lillington, NC 27546 United States
P +1 (910) 814-3800 **E** sales@boonedamtomsed.com
F +1 (910) 814-3899 **I** www.boonedamtomsed.com